zehnder
always the best climate

Zehnder Fina Lean Bar

Product data sheet

Zehnder Fina Lean Bar

Purism at its best. With its clear and minimalist design, Zehnder Fina Lean Bar blends into any modern bathroom. The design is complemented by the linear towel rail, which keeps towels beautifully warm at all times. The smooth surface and the large heating surface provide comfortable warmth in no time. Available in almost any colour and finish from the Zehnder colour chart.

Advantages

- Smooth surface makes for easy cleaning
- The height-adjustable chrome towel rail is particularly convenient for hanging towels.
- Additional towel rails are optionally available to conveniently provide more space for hanging towels.
- Compatible with a heat pump and/or low-temperature systems.
- High thermal output means large rooms are heated up rapidly.
- Pleasant warmth due to high radiant heat.

Special benefits for hot water operation

- Flexible and easy installation due to 50 mm centre connections.

Special benefits for electric operation

- Electric operation provides warm towels and comfortable rooms all year round.
- Energy-efficient and comfortable heating with innovative “open window detection”.
- Customisable daily and weekly programmes for convenient, on-demand operation.
- Low energy consumption of only 0.5 W in stand-by mode for increased energy efficiency.
- High energy efficiency due to compliance with the European Ecodesign Directive reduces energy costs.
- Diverse adjustment options: Regulated room temperature or operation in energy-saving or frost-protection mode.
- User-friendly remote control allows simple operation.
- Comes ready-to-plug for easy and quick installation
- Aesthetically appealing design due to concealed electric heating element
- Timer function for on-demand operation.
- Flexible control options: control device for wall mounting or base.

Zehnder Fina Lean Bar

Model overview

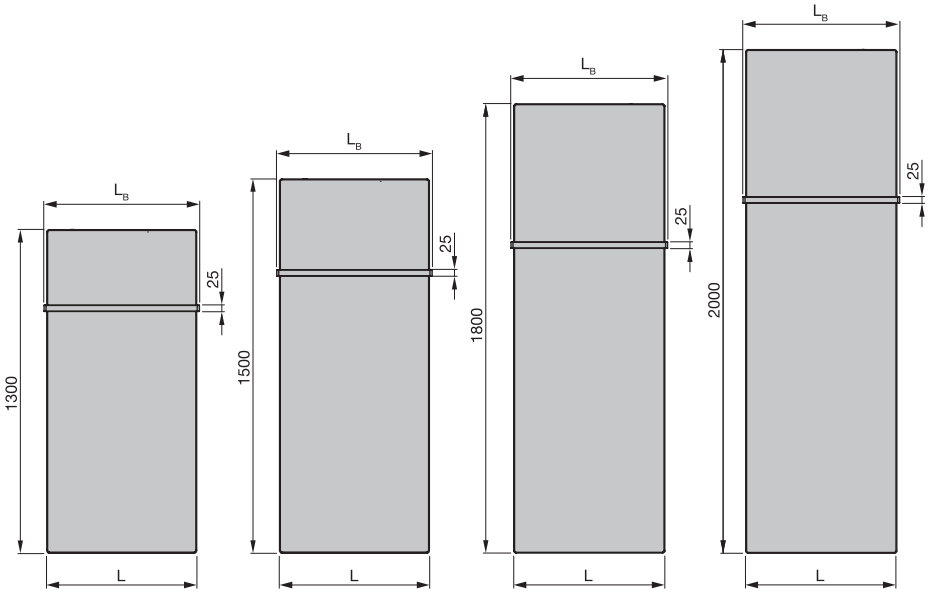

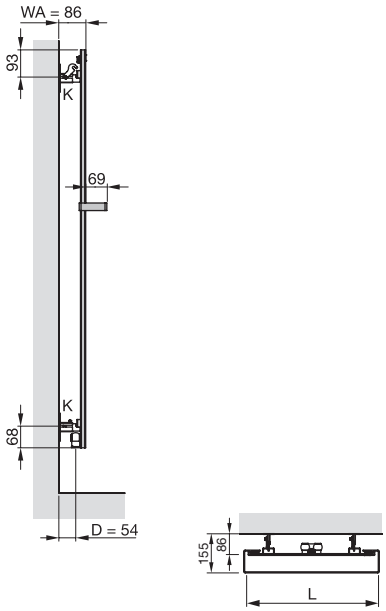

SIDE VIEW TOP VIEW

L = length
L_B = towel rail length
D = distance from wall to middle of connection
WA = wall clearance
K = bracket

Dimensions in mm

Zehnder Fina Lean Bar

Connection to hot water central heating system

Painted version

Model	H	L	L_B	Thermal output			
	mm	mm	mm	75/65/20 °C[1)] Watt	70/55/24 °C Watt	55/45/24 °C Watt	55/45/20 °C Watt
FIF-130-050	1300	500	536	620	449	277	330
FIF-150-050	1500	500	536	717	522	324	386
FIF-180-050	1800	500	536	863	626	387	461
FIF-130-060	1300	600	636	723	525	324	386
FIF-150-060	1500	600	636	837	607	375	447
FIF-180-060	1800	600	636	1008	727	446	533
FIF-130-070	1300	700	736	824	599	371	442
FIF-150-070	1500	700	736	954	690	424	507
FIF-180-070	1800	700	736	1148	824	501	601

Electric-only operation

Painted version

Model	H mm	L mm	Output electric Watt
FIFE-130-050/D	1300	500	350
FIFE-150-050/D	1500	500	500
FIFE-180-050/D	1800	500	500
FIFE-180-060/D	1800	600	750
FIFE-180-070/D	1800	700	750

Product details

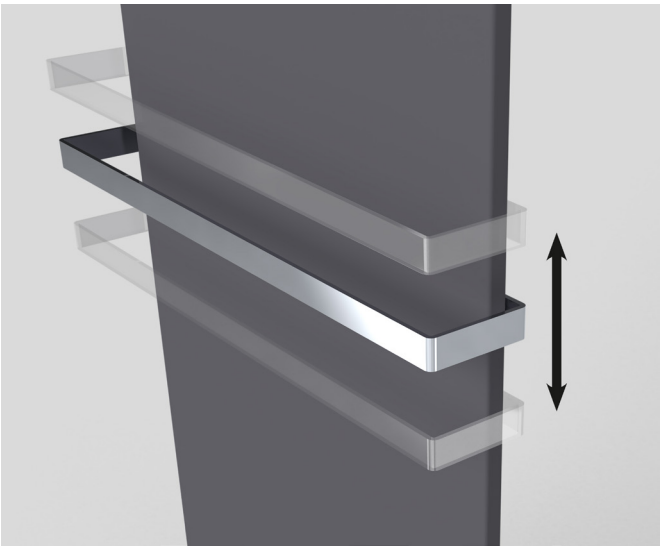

H = height, L = length, L_B = towel rail length
1) Nominal heat output according to EN 442

Z-SI_V20210226, RAD_DAS Fina Lean bar,en, subject to change without prior notice!)

Zehnder Group Deutschland GmbH · Sales International · Almweg 34 · 77933 Lahr· Germany
T +49 7821 586-392 · sales.international@zehndergroup.com· www.international.zehnder-systems.com